Current part is item (7) on diagram. Available at www.oshkoshequipment.com

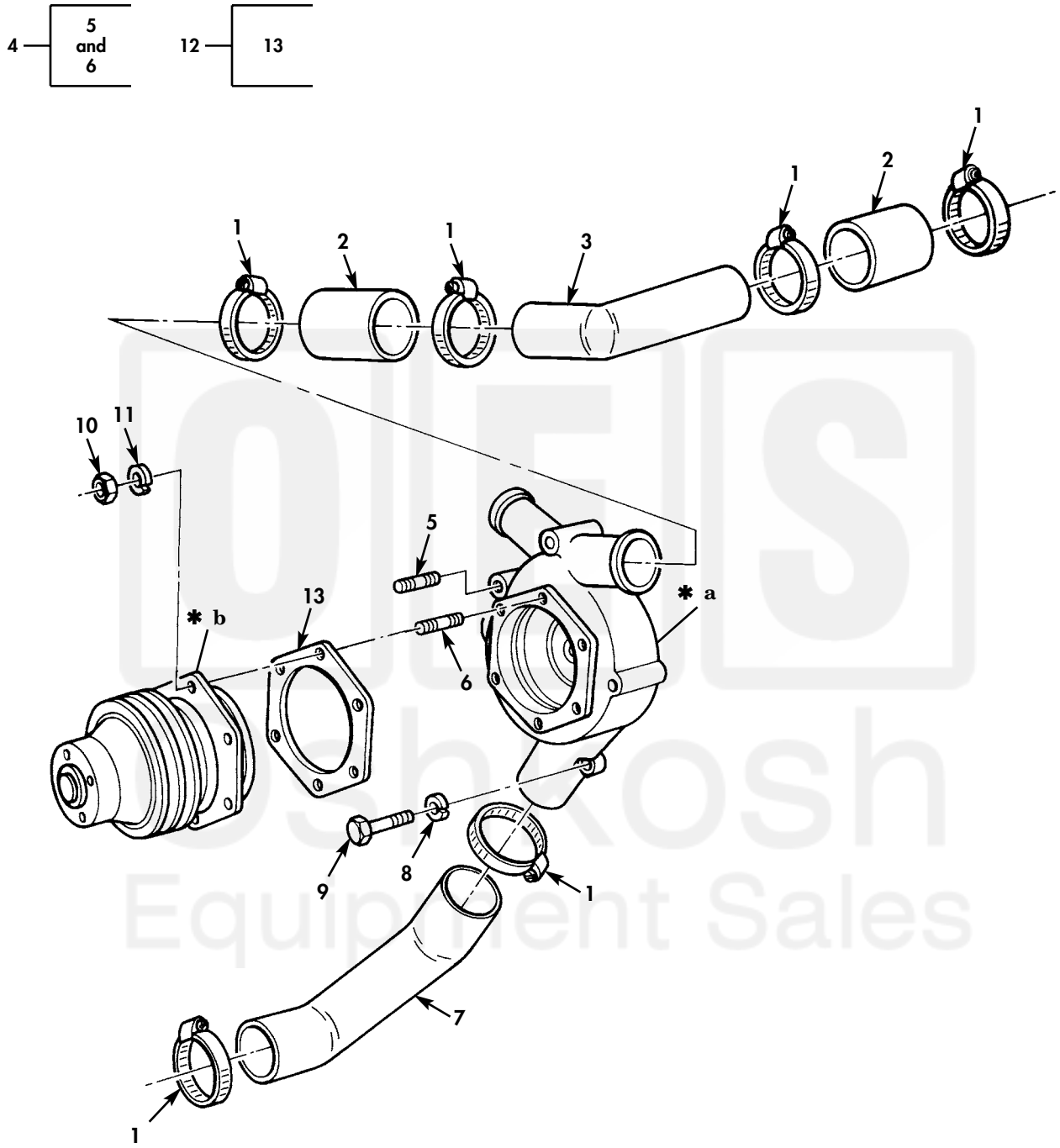

✱ **a** PART OF ITEM 4
✱ **b** PART OF ITEM 12

Figure 36. Water Pump and Related Parts.

Current part is item (7) on diagram. Available at www.oshkoshequipment.com

Current part is item (7) on diagram. Available at www.oshkoshequipment.com

(1) ITEM NO	(2) SMR CODE	(3) NSN	(4) CAGEC	(5) PART NUMBER	(6) DESCRIPTION AND USABLE ON CODE (UOC)	(7) QTY
					GROUP 0504 WATER PUMP	
					FIG. 36 WATER PUMP AND RELATED PARTS	
1	PAOZZ	4730-00-909-8627	01276	FF9311-36	CLAMP HOSE.....	6
2	MOOZZ		96906	MS521301A2 17R-3	HOSE,NONMETALLIC MAKE FROM HOSE, P/N MS521301A2 17R,3.25 INCHE.....	1
3	PAOZZ	4710-00-133-8174	19207	10935616	TUBE,BENT,METALLIC.....	1
4	PAOZZ	2930-00-133-8173	19207	10935640	PUMP,COOLING SYSTEM.....	1
5	PAOZZ	5307-00-741-3421	19207	7413421	.STUD,PLAIN.....	1
6	PAOZZ	5307-00-904-5675	19207	10899073-5	.STUD,PLAIN.....	6
7	PAOZZ	4720-00-854-3733	19207	10872023	HOSE,PREFORMED.....	1
8	PAOZZ	5310-00-959-4675	96906	MS35340-46	WASHER,LOCK.....	3
9	PAOZZ	5306-00-850-3993	19207	7748976	BOLT,MACHINE.....	3
10	PAOZZ	5310-00-880-7744	96906	MS51967-5	NUT,PLAIN,HEXAGON.....	6
11	PAOZZ	5310-00-959-4679	96906	MS35340-45	WASHER,LOCK.....	6
12	PAOZZ	2930-00-903-0679	14207	5702725	WATER PUMP,DRIVE AS.....	1
13	PAOZZ	5330-00-901-8663	19207	10889854	.GASKET.....	1

END OF FIGURE

Current part is item (7) on diagram. Available at www.oshkoshequipment.com